Data Sheet

Article number: 2301078421
Description: E+G Handwheel
VRTP.80+I-A8

Measures

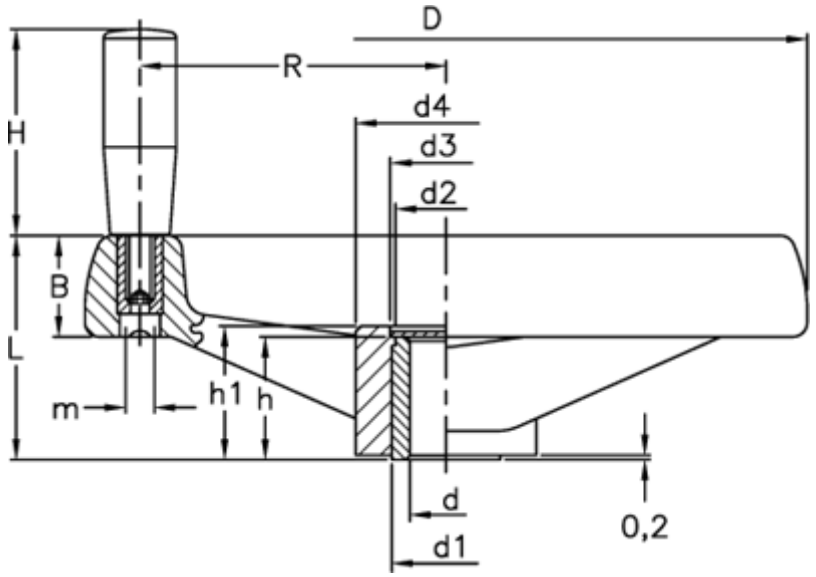

B	= 18	H	= 40
C (N m)	= 32	h	= 17
D	= 80	h1	= 19
d1	= 18	L	= 35
d2	= 16	L (J)	= 5
d3	= 17	m	= M6
d4	= 23	R	= 29
d H7	= 8		

Product drawings and brochures of any kind may contain errors for which Brd. Klee A/S cannot be liable.